Work Order ID 68569

Monday, April 18, 2011 11:32:23 AM

Item ID: D412-704-041 **Accept** **Setup Start**

Revision ID: **Stop**

Item Name: Pedal Assembly (205/212/214/412)

Start Date: 4/18/2011 **Start Qty:** 4.00 **Cust Item ID:**

Required Date: 4/21/2011 **Req'd Qty:** 4.00 **Customer:**

Reference:

Approvals: **Process Plan:** _____ **Date:** 110418 **Tooling:** _____ **Date:** _____ **Run Start**

QC: _____ **Date:** _____ **SPC (Y/N):** _____ **Date:** _____ **Stop**

Sequence ID/ Work Center ID	Operation Description	Set Up/ Run Hours	Tool ID	Tool #	Plan Code	Accept Qty	Reject Qty	Reject Number	Insp. Stamp
Draw Nbr	**Revision Nbr**								
D412-704-041	Rev A								
100	Small Fab	0.00							
Small Fab	**Memo**	0.00							
Small Fab	Assemble pedal as per Dwg D412-704-041 Tighten & Torque Bolts as per Dwg D412-704-041								
110	QC5- Inspect part completeness to step on W/O	0.00							
QC	**Memo**	0.00							
Quality Control									
120	Pick Kit	0.00							
Packaging	**Memo**	0.00							
Packaging									

Dart Aerospace Ltd

W/O:		WORK ORDER CHANGES					
DATE	STEP	PROCEDURE CHANGE	By	Date	Qty	Approval Chief Eng / Prod Mgr	Approval QC Inspector

Part No: _____ **PAR #:** _____ **Fault Category:** _____ **NCR:** Yes No **DQA:** _____ **Date:** _____

Resolution: _____ **Disposition:** _____ **QA: N/C Closed:** _____ **Date:** _____

NCR:		WORK ORDER NON-CONFORMANCE (NCR)						
DATE	STEP	Description of NC Section A	Corrective Action Section B			Verification Section C	Approval Chief Eng	Approval QC Inspector
			Initial Chief Eng	Action Description Chief Eng	Sign & Date			

NOTE: Date & initial all entries

H:\fFORMS\Quality Assurance\approved QA\NCRWO RevE

Work Order ID 68569

Monday, April 18, 2011 11:32:23 AM

Item ID: D412-704-041 **Accept** **Setup Start**

Revision ID: **Stop**

Item Name: Pedal Assembly (205/212/214/412)

Start Date: 4/18/2011 **Start Qty:** 4.00 **Cust Item ID:**

Required Date: 4/21/2011 **Req'd Qty:** 4.00 **Customer:**

Reference:

Run Start

Approvals: **Process Plan:** _____ **Date:** _____ **Tooling:** _____ **Date:** _____

Stop

QC: _____ **Date:** _____ **SPC (Y/N):** _____ **Date:** _____

Sequence ID/ Work Center ID	Operation Description	Set Up/ Run Hours	Tool ID	Tool #	Plan Code	Accept Qty	Reject Qty	Reject Number	Insp. Stamp
130	QC4- 100% Inspect kits for completeness	0.00							
QC	Memo	0.00				44			
Quality Control									
140	Identify as per dwg & Stock Location: 191	0.00							
Packaging	Memo	0.00							
Packaging									
150	QC21- Final Inspection - Work Order Release	0.00							
QC	Memo	0.00							
Quality Control									

11/4/26

11/4/26

MF 11-04-26

Dart Aerospace Ltd

W/O:		WORK ORDER CHANGES					
DATE	STEP	PROCEDURE CHANGE	By	Date	Qty	Approval Chief Eng / Prod Mgr	Approval QC Inspector

Part No: _____ **PAR #:** _____ **Fault Category:** _____ **NCR:** Yes No **DQA:** _____ **Date:** _____

Resolution: _____ **Disposition:** _____ **QA: N/C Closed:** _____ **Date:** _____

NCR:		WORK ORDER NON-CONFORMANCE (NCR)						
DATE	STEP	Description of NC Section A	Corrective Action Section B			Verification Section C	Approval Chief Eng	Approval QC Inspector
			Initial Chief Eng	Action Description Chief Eng	Sign & Date			

NOTE: Date & initial all entries

H:\fFORMS\Quality Assurance\approved QA\NCRWO RevE

Picklist Print

Monday, April 18, 2011 11:32:29 AM

5

Work Order ID: 68569

Parent Item: D412-704-041

Parent Item Name: Pedal Assembly (205/212/214/412)

Start Date: 4/18/2011 **Required Date:** 4/21/2011

Start Qty: 4.00 **Required Qty:** 4.00

Comments:
IPP Rev:B□05.01.28□Removed hardware on Step 2; Added Figures 1-3□KJ/RF
IPP Rev:C□06.03.08 Re-format EC
IPP Rev:D 07-03-20 Added Dwg D412-704-041 07-03-20 JLM
IPP Rev:E 07.05.02 Reformat EC
IPP Rev:F 08-10-08 as per revB DD veriifed by:EC

Component Item ID/ Item Name	Replacement Item ID	Mfg/ Purch	Bin Item	Primary Location	Last Location	Route Seq ID	Unit of Measure	Qty on Hand	Qty per Kit	Total Qty	Qty Issued	Date Issued	Status
AN3-10A Bolt		Purchased	No			100	Each	122.0000	1	4	SB	11/04/19	(4)
				Location		**Loc Qty**		**Loc Code**					
				ST351		122							
					116400	22				4			
					117313	100							
AN315-4R Nut		Purchased	No			100	Each	57.0000	1	4	SB	11/04/19	(4)
				Location		**Loc Qty**		**Loc Code**					
				ST324		57							
					17566	57				4			
AN4-10A Bolt		Purchased	No			100	Each	97.0000	1	4	SB	11/04/19	(4)
				Location		**Loc Qty**		**Loc Code**					
				ST356		97							
					115835	2				2			
					116419	45				2			
					117313	50							

Dart Aerospace Ltd

W/O:		WORK ORDER CHANGES					
DATE	STEP	PROCEDURE CHANGE	By	Date	Qty	Approval Chief Eng / Prod Mgr	Approval QC Inspector

Part No: _____ PAR #: _____ Fault Category: _____ NCR: Yes No DQA: _____ Date: _____

Resolution: _____ Disposition: _____ QA: N/C Closed: _____ Date: _____

NCR:		WORK ORDER NON-CONFORMANCE (NCR)						
DATE	STEP	Description of NC Section A	Corrective Action Section B			Verification Section C	Approval Chief Eng	Approval QC Inspector
			Initial Chief Eng	Action Description Chief Eng	Sign & Date			

NOTE: Date & initial all entries

H:\fFORMS\Quality Assurance\approved QA\NCRWO RevE

Picklist Print

Monday, April 18, 2011 11:32:30 AM

Work Order ID: 68569

Parent Item: D412-704-041

Parent Item Name: Pedal Assembly (205/212/214/412)

Start Date: 4/18/2011 **Required Date:** 4/21/2011

Start Qty: 4.00 **Required Qty:** 4.00

AN4-12A Bolt		Purchased	No	100	Each	207.0000	2	8	SB 11/04/19 (4)

Location	Loc Qty	Loc Code	
ST357	207		
112314	7		7
115371	40		1
115422	160		

AN4-13A Bolt		Purchased	No	100	Each	372.0000	1	4	SB 11/04/19 (4)

Location	Loc Qty	Loc Code	
ST357	372		
117313	372		1

AN960JD10 Washer	NAS1149D0363J	Purchased	No	100 M 114583	Each	0.0000	5	20	20 SB 11/04/19 (4)
AN960JD416 Washer	NAS1149D0463J	Purchased	No	100 M 117065	Each	0.0000	11	44	44 SB 11/04/19 (4)
AN960JD416L Washer	NAS1149D0416J	Purchased	No	100	Each	5.0000	3	12	SB 11/04/19 (4)

Location	Loc Qty	Loc Code	
FP-B	5		
110153	5		12
	M 114884		

Dart Aerospace Ltd

W/O:		WORK ORDER CHANGES					
DATE	STEP	PROCEDURE CHANGE	By	Date	Qty	Approval Chief Eng / Prod Mgr	Approval QC Inspector

Part No: _____ **PAR #:** _____ **Fault Category:** _____ **NCR:** Yes No **DQA:** _____ **Date:** _____

Resolution: _____ **Disposition:** _____ **QA: N/C Closed:** _____ **Date:** _____

NCR:		WORK ORDER NON-CONFORMANCE (NCR)						
DATE	STEP	Description of NC Section A	Corrective Action Section B			Verification Section C	Approval Chief Eng	Approval QC Inspector
			Initial Chief Eng	Action Description Chief Eng	Sign & Date			

NOTE: Date & initial all entries

H:\fFORMS\Quality Assurance\approved QA\NCRWO RevE

Picklist Print

Monday, April 18, 2011 11:32:30 AM

Work Order ID: 68569

Parent Item: D412-704-041

Parent Item Name: Pedal Assembly (205/212/214/412)

Start Date: 4/18/2011 **Required Date:** 4/21/2011

Start Qty: 4.00 **Required Qty:** 4.00

D3204-041	Manufactured	No	100	Each	6.0000	1	4	SB 11/04/19 (4)
Release Pedal Assembly								

Location	Loc Qty	Loc Code	
GA	6		
60509	2		2
64815	4		2

D3205-1	Manufactured	No	100	Each	6.0000	1	4	SB 11/04/19 (4)
Pedal Bracket								

Location	Loc Qty	Loc Code	
GA	6		
55731	2		2
64816	4		2

D3205-3	Manufactured	No	100	Each	4.0000	1	4	SB 11/04/19 (4)
Back Plate								

Location	Loc Qty	Loc Code	
GA	4		
47491	4		4

D3206-1	Manufactured	No	100	Each	7.0000	1	4	SB 11/04/19 (4)
Pedal Arm								

Location	Loc Qty	Loc Code	
GA	7		
55732	7		4

Dart Aerospace Ltd

W/O:		WORK ORDER CHANGES					
DATE	STEP	PROCEDURE CHANGE	By	Date	Qty	Approval Chief Eng / Prod Mgr	Approval QC Inspector

Part No: _____ **PAR #:** _____ **Fault Category:** _____ **NCR:** Yes No **DQA:** _____ **Date:** _____

Resolution: _____ **Disposition:** _____ **QA: N/C Closed:** _____ **Date:** _____

NCR:		WORK ORDER NON-CONFORMANCE (NCR)						
DATE	STEP	Description of NC Section A	Corrective Action Section B			Verification Section C	Approval Chief Eng	Approval QC Inspector
			Initial Chief Eng	Action Description Chief Eng	Sign & Date			

NOTE: Date & initial all entries

H:\fFORMS\Quality Assurance\approved QA\NCRWO RevE

Picklist Print

Monday, April 18, 2011 11:32:30 AM

Work Order ID: 68569

Parent Item: D412-704-041

Parent Item Name: Pedal Assembly (205/212/214/412)

Start Date: 4/18/2011 **Required Date:** 4/21/2011

Start Qty: 4.00 **Required Qty:** 4.00

D3209-041	Manufactured	No	100	Each	7.0000	1	4	SB 11/04/19 (4)
Bracket Assembly								

Location	Loc Qty	Loc Code	
GA	7		
60295	3		2
65154	4		2

MS21042L3	Purchased	No	100	Each	1,725.000	1	4	SB 11/04/19 (4)
Nut								

Location	Loc Qty	Loc Code	
ST300	1725		
116391	151		4
116540	800		
116549	774		

MS21042L4	Purchased	No	100	Each	2,474.000	5	20	SB 11/04/19 (4)
Nut								

Location	Loc Qty	Loc Code	
ST300	2474		
116188	474		20
116823	2000		

MS24694-S102	Purchased	No	100	Each	52.0000	1	4	SB 11/04/19 (4)
Screw								

Location	Loc Qty	Loc Code	
ST288	50		
114382	50		2
ST289A	2		
113644	2		2

Dart Aerospace Ltd

W/O:		WORK ORDER CHANGES					
DATE	STEP	PROCEDURE CHANGE	By	Date	Qty	Approval Chief Eng / Prod Mgr	Approval QC Inspector

Part No: _____ **PAR #:** _____ **Fault Category:** _____ **NCR:** Yes No **DQA:** _____ **Date:** _____

Resolution: _____ **Disposition:** _____ **QA: N/C Closed:** _____ **Date:** _____

NCR:		WORK ORDER NON-CONFORMANCE (NCR)						
DATE	STEP	Description of NC Section A	Corrective Action Section B			Verification Section C	Approval Chief Eng	Approval QC Inspector
			Initial Chief Eng	Action Description Chief Eng	Sign & Date			

NOTE: Date & initial all entries

Picklist Print

Monday, April 18, 2011 11:32:31 AM

Work Order ID: 68569

Parent Item: D412-704-041

Parent Item Name: Pedal Assembly (205/212/214/412)

Start Date: 4/18/2011 **Required Date:** 4/21/2011

Start Qty: 4.00 **Required Qty:** 4.00

MS9519-10		Purchased	No	100	Each	40.0000	1	4	SB 11/04/19 (4)
Bolt									

Location	Loc Qty	Loc Code	
ST296	40		
100290	40		4

AN3-6A		Purchased	No	120	Each	144.0000	2	8	SB 11/04/19 (4)
Bolt									

Location	Loc Qty	Loc Code	
ST351	144		
116191	44		8
116704	100		

AN960JD10L	NAS1149D0332J	Purchased	No	120	Each	0.0000	4	16	16 SB 11/04/19 (4)
Washer									

MS21042L3		Purchased	No	120	Each	1,725.000	2	8	SB 11/04/19 (4)
Nut									

Location	Loc Qty	Loc Code	
ST300	1725		
116391	151		8
116540	800		
116549	774		

Dart Aerospace Ltd

W/O:		WORK ORDER CHANGES					
DATE	STEP	PROCEDURE CHANGE	By	Date	Qty	Approval Chief Eng / Prod Mgr	Approval QC Inspector

Part No: _____ PAR #: _____ Fault Category: _____ NCR: Yes No DQA: _____ Date: _____

Resolution: _____ Disposition: _____ QA: N/C Closed: _____ Date: _____

NCR:		WORK ORDER NON-CONFORMANCE (NCR)						
DATE	STEP	Description of NC Section A	Corrective Action Section B			Verification Section C	Approval Chief Eng	Approval QC Inspector
			Initial Chief Eng	Action Description Chief Eng	Sign & Date			

NOTE: Date & initial all entries

H:\fFORMS\Quality Assurance\approved QA\NCRWO RevE

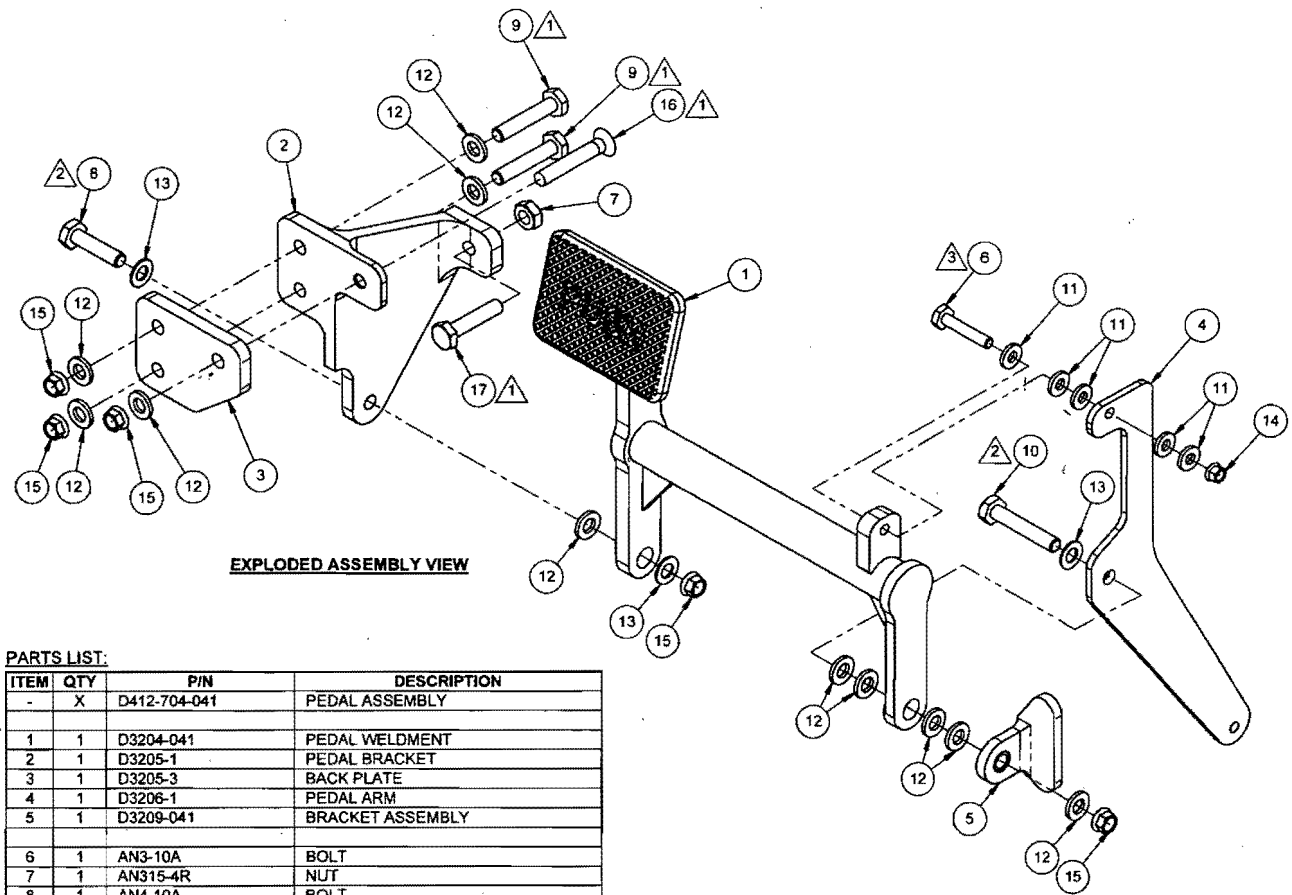

EXPLODED ASSEMBLY VIEW

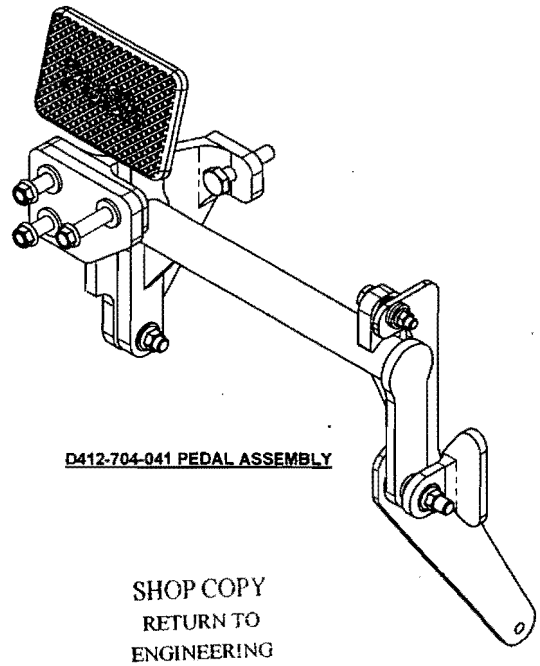

D412-704-041 PEDAL ASSEMBLY

PARTS LIST:

ITEM	QTY	P/N	DESCRIPTION
-	X	D412-704-041	PEDAL ASSEMBLY
1	1	D3204-041	PEDAL WELDMENT
2	1	D3205-1	PEDAL BRACKET
3	1	D3205-3	BACK PLATE
4	1	D3206-1	PEDAL ARM
5	1	D3209-041	BRACKET ASSEMBLY
6	1	AN3-10A	BOLT
7	1	AN315-4R	NUT
8	1	AN4-10A	BOLT
9	2	AN4-12A	BOLT
10	1	AN4-13A	BOLT
11	5	AN960JD10	WASHER
12	11	AN960JD416	WASHER
13	3	AN960JD416L	WASHER
14	1	MS21042L3	NUT (OR MS21042-3)
15	5	MS21042L4	NUT (OR MS21042-4)
16	1	MS24694-S102	SCREW
17	1	MS9519-10	BOLT
N/A*	2	AN3-6A	BOLT
N/A*	4	AN960JD10L	WASHER
N/A*	2	MS21042L3	NUT (OR MS21042-3)

* SHIPPED LOOSE WITH -041 KIT (NOT PRE-ASSEMBLED AT DART)

NOTES:

1. INSTALL IDENTIFIED FASTENERS LOOSE (HAND TIGHTEN ONLY).
2. TIGHTEN IDENTIFIED FASTENERS UNTIL SNUG. ENSURE THAT PARTS CAN STILL ROTATE.
3. TORQUE IDENTIFIED FASTENERS TO 15-25 in-lbs (1.7-2.8 N-m).

SHOP COPY
RETURN TO
ENGINEERING
UNCONTROLLED COPY
SUBJECT TO AMENDMENT
WITHOUT NOTICE
WORK ORDER
NO. 68569
RH-04-10

RELEASED
07.01.30

REV	DATE	DESCRIPTION
A	07.01.23	NEW ISSUE

DESIGN: CB	DRAWN BY: CB	DART AEROSPACE LTD, HAWKESBURY, ONTARIO, CANADA
CHECKED: LE	APPROVED:	DRAWING NO. D412-704-041 — REV. A, SHEET 1 OF 1
DATE: 07.01.23		TITLE: PEDAL ASSEMBLY — SCALE 1:2

COPYRIGHT © 2007 BY DART AEROSPACE LTD
THIS DOCUMENT IS PRIVATE AND CONFIDENTIAL AND IS SUPPLIED ON THE EXPRESS CONDITION THAT IT IS NOT TO BE USED FOR ANY PURPOSE OR COPIED OR COMMUNICATED TO ANY OTHER PERSON WITHOUT WRITTEN PERMISSION FROM DART AEROSPACE LTD.

Dart Aerospace Ltd

W/O:		WORK ORDER CHANGES					
DATE	STEP	PROCEDURE CHANGE	By	Date	Qty	Approval Chief Eng / Prod Mgr	Approval QC Inspector

Part No: _____ **PAR #:** _____ **Fault Category:** _____ **NCR:** Yes No **DQA:** _____ **Date:** _____

Resolution: _____ **Disposition:** _____ **QA: N/C Closed:** _____ **Date:** _____

NCR:		WORK ORDER NON-CONFORMANCE (NCR)						
DATE	STEP	Description of NC Section A	Corrective Action Section B			Verification Section C	Approval Chief Eng	Approval QC Inspector
			Initial Chief Eng	Action Description Chief Eng	Sign & Date			

NOTE: Date & initial all entries